DigiBull A2

Battery Charger, Discharger & Cycler

For NiCd and NiMH battery

Convertek General Power Supply
Zhuhai, Guangdong
China

CONVERTEK

Phone: 86-756-3366872
Fax: 86-756-3366334
http: //www.cvt.com.cn

DigiBull A2 Battery Charger, Discharger&Cycler

Introduction:

DigiBull A2 is a CPU based versatile charger, discharger and cycler designed for NiCd and NiMH battery. It recharges 1 - 10 cells of NiCd&NiMH battery with capacitor up to 10Ah. Charge rate can be adjustable from 0.1A to 5A (0.1A step) and a discharge rate of 0.1A to 9.9A (0.1A step) with automatic discharge cut off. Functions like CHARGE, DISCHARGE, CHARGE TO DISCHARGE and DISCHARGE TO CHARGE are provided.

Features:

- Advanced 0△V and -△V detecting for NiMH and NiCd battery respectively charges battery to 100% without overcharging.
- High frequency switch mode topology is adopted to achieve high efficiency, small size, cool temperature and lightweight.
- Buck-Boost topology ensures to charge battery whether voltage of pack exceeds the power supply or not.
- 16x2 character backlit alphanumeric LCD displays battery type, battery cell, mAh, time, battery voltage, charge current, discharge current, cycle number and mode.
- Reverse polarity protection both at input and output is provided. Protections like over temperature, over current, battery error detection and short circuit (without battery pack on) are also available.
- Automatic maxim battery capacity protection prevents battery packs from being overcharged by false peak detect.
- Programmable for up to nine cycles for testing or conditioning in packs.
- Data for the last cycles are stored automatically.
- Selected settings for last time are displayed as the default setting to get start quickly.
- Buzzer beeps when charge or discharge process is ended.
- Discharge termination automatically adjustable according to the discharge rate.
- 8-bit 8MHz CPU with 16k ROM, 1k RAM, 8 channel 10 bit ADC, and 4 channel 12-bit built inside.

Specification:

- Input Voltage: DC 10.5V to 15V
- Input Current: max approx 10A
- Charge current: 0.1A to 5A up to 17V
- Automatic charge termination: Delta Peak process
- Trickle charge current: 10% of selected charge rate

- Discharge current: 0.1A to 9.9A
  - For 1~5 cells: Discharge current is up to 9.9A
  - For 6~10 cells: Discharge current is up to 8A, 7A, 6A, 5A and 5A respectively.
- Weight [~g]: approx.1250g
- Dimensions [~mm]: approx. 168(W)*130(D)*68(H)mm

Operational Modes:

CHARGING MODE programmable settings

- Number of cells: 1~10 cells.
- Type of battery: NiCd or NiMH.
- Charge rate: 0.1A~5A.
- Battery rated capacitor in mAH: 100mAH~10000mAH (10mAH step).

DISCHARGING MODE programmable settings

- Number of cells: 1~10 cells.
- Type of battery: NiCd or NiMH.
- Discharge rate: 0.1A~9.9A.

CYCLE MODE programmable settings

- Type of cycle: Charge to discharge, discharge to charge
- Number of cycles: 1~9 cycles
- Number of cells: 1~10 cells
- Type of battery: NiCd or NiMH.
- Charge rate: 0.1A~5A.
- Discharge rate: 0.1A~9.9A.

MENU 1

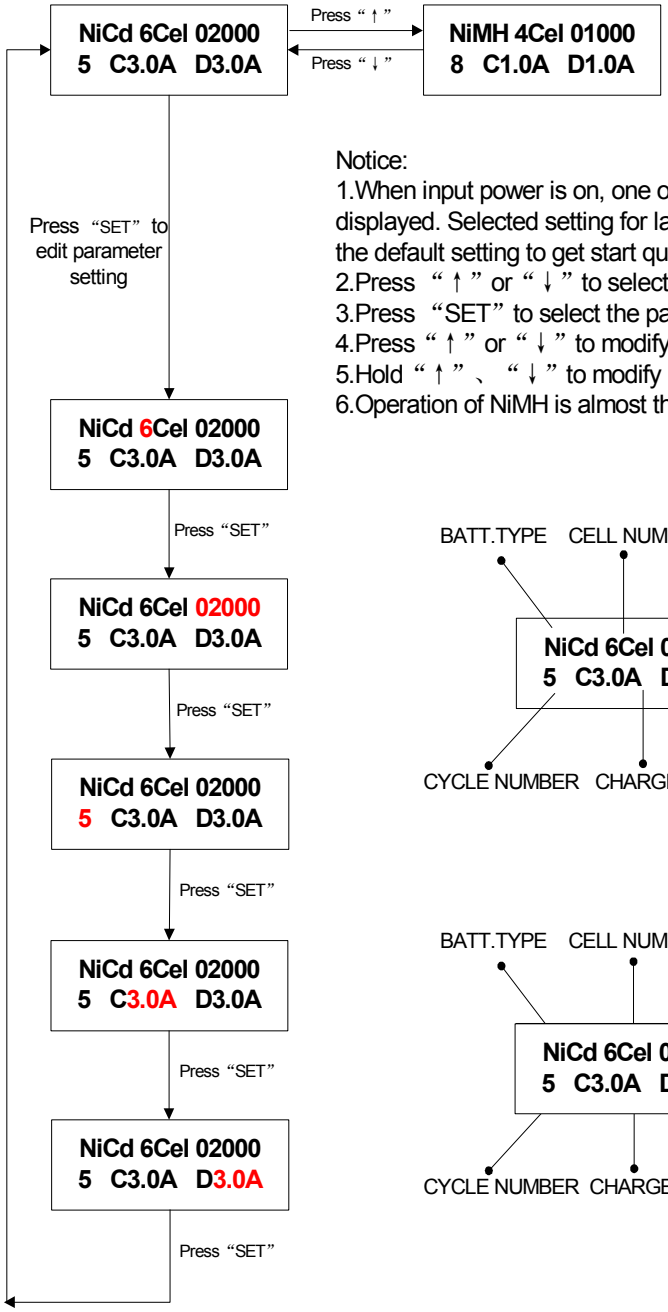

Notice:

1.When input power is on, one of the top two screens will be displayed. Selected setting for last time operation is displayed as the default setting to get start quickly.
2.Press " ↑ " or " ↓ " to select battery type you want.
3.Press "SET" to select the parameters you want to modify.
4.Press " ↑ " or " ↓ " to modify the selected parameters.
5.Hold " ↑ " 、 " ↓ " to modify "Maxim Capacity" quickly.
6.Operation of NiMH is almost the same as NiCd.

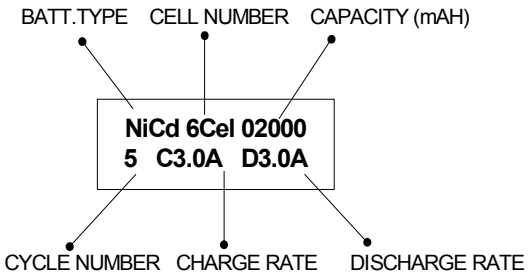

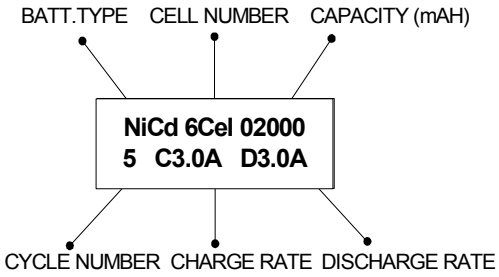

MENU 2

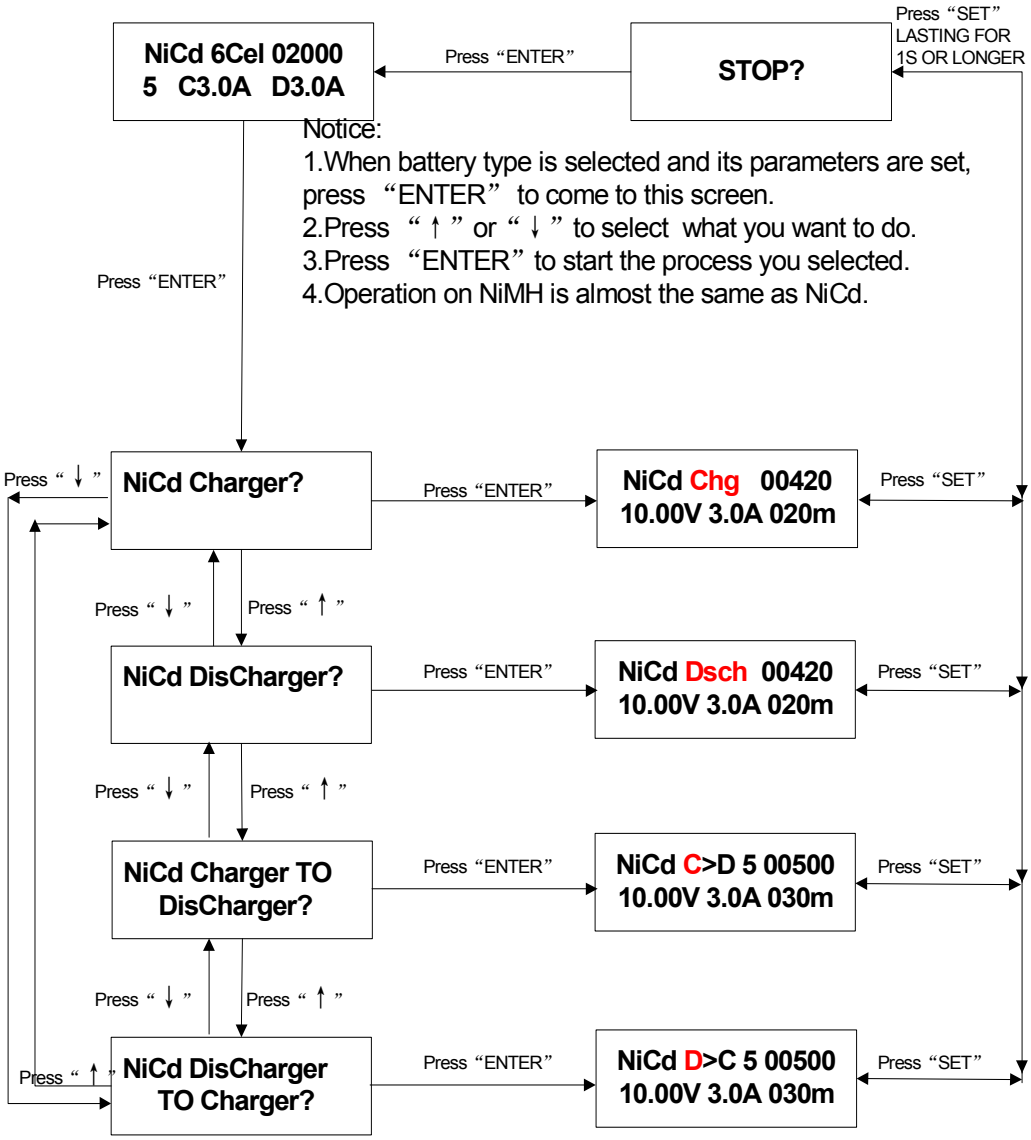
NiCd 6Cel 02000
5 C3.0A D3.0A
Press "ENTER"
STOP?
Press "SET"
LASTING FOR
1S OR LONGER
Notice:
1.When battery type is selected and its parameters are set, press "ENTER" to come to this screen.
2.Press "↑" or "↓" to select what you want to do.
3.Press "ENTER" to start the process you selected.
4.Operation on NiMH is almost the same as NiCd.
Press "ENTER"
Press "↓"
NiCd Charger?
Press "ENTER"
NiCd Chg 00420
10.00V 3.0A 020m
Press "SET"
Press "↓"
Press "↑"
NiCd DisCharger?
Press "ENTER"
NiCd Dsch 00420
10.00V 3.0A 020m
Press "SET"
Press "↓"
Press "↑"
NiCd Charger TO
DisCharger?
Press "ENTER"
NiCd C>D 5 00500
10.00V 3.0A 030m
Press "SET"
Press "↓"
Press "↑"
Press "↑"
NiCd DisCharger
TO Charger?
Press "ENTER"
NiCd D>C 5 00500
10.00V 3.0A 030m
Press "SET"

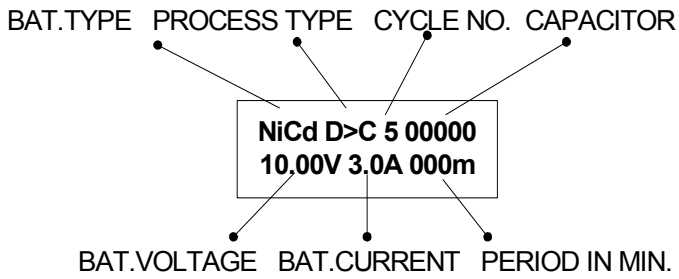
BAT.TYPE
PROCESS TYPE
CYCLE NO.
CAPACITOR
NiCd D>C 5 00000
10.00V 3.0A 000m
BAT.VOLTAGE
BAT.CURRENT
PERIOD IN MIN.

MENU 3

Notice:
1,” C>D” means discharging follows charging;” D>C” means charging follows discharging.
2, “C” flashes while charging;” D” flashes while discharging.
3, “Cycle Number” decress from the setting to zero when finished cycleing.
4, “Chg” means charging;” Dschg” means discharging.” Tri” means trickle charging.
5, There is an one minute pause between the transition of ” C>D” or ” D>C” ,during this period a “DLY” flashes.

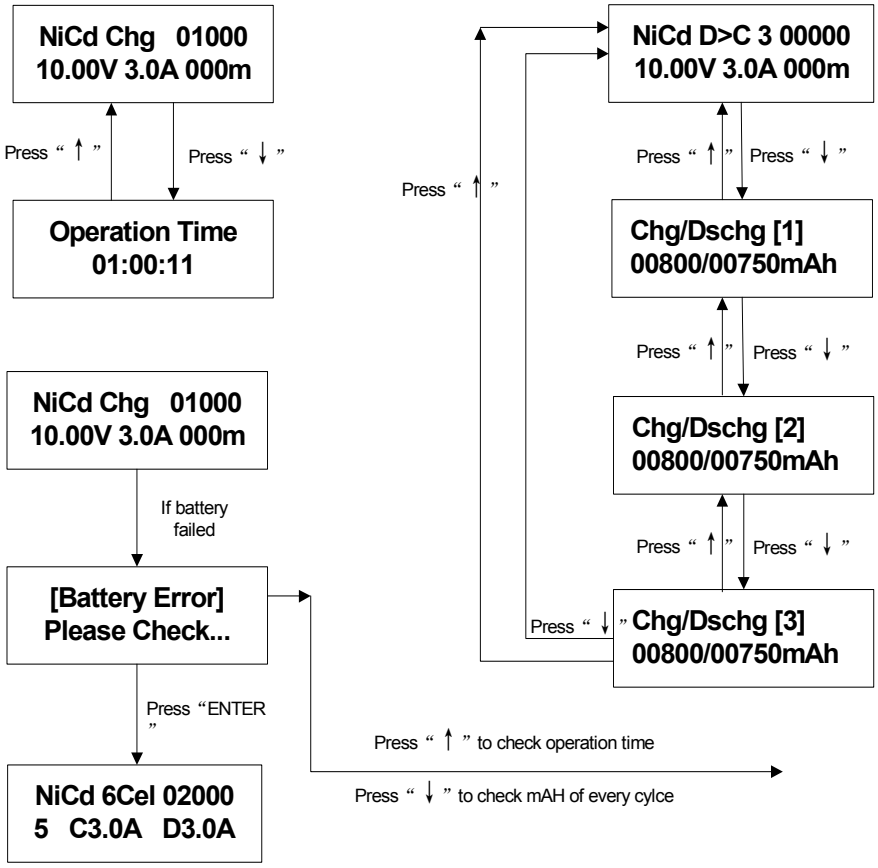

.